Slip Fitter Mount

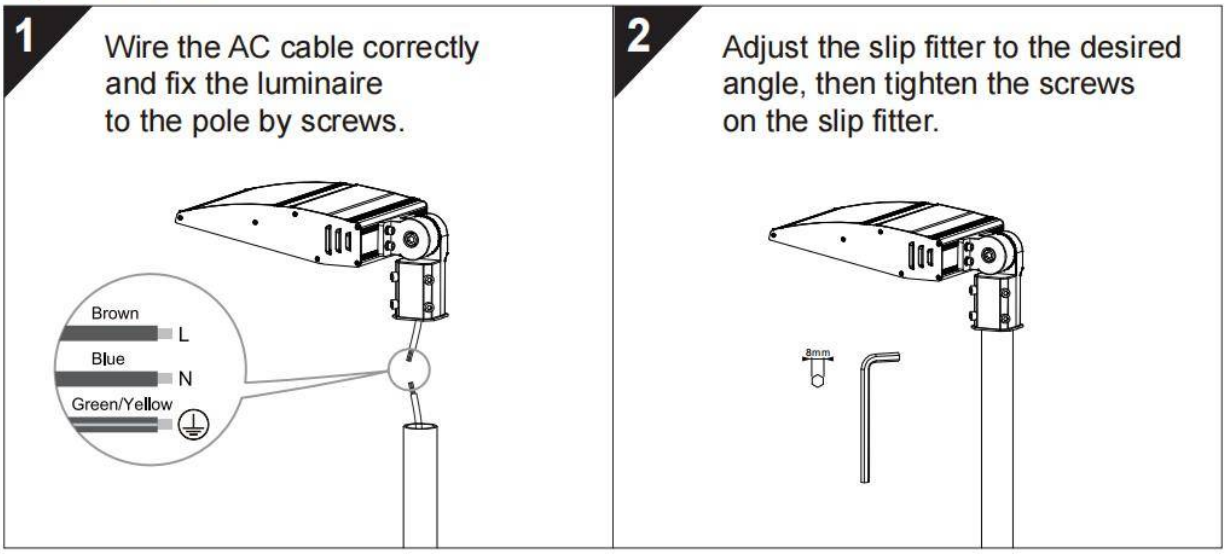

Bracket Mount

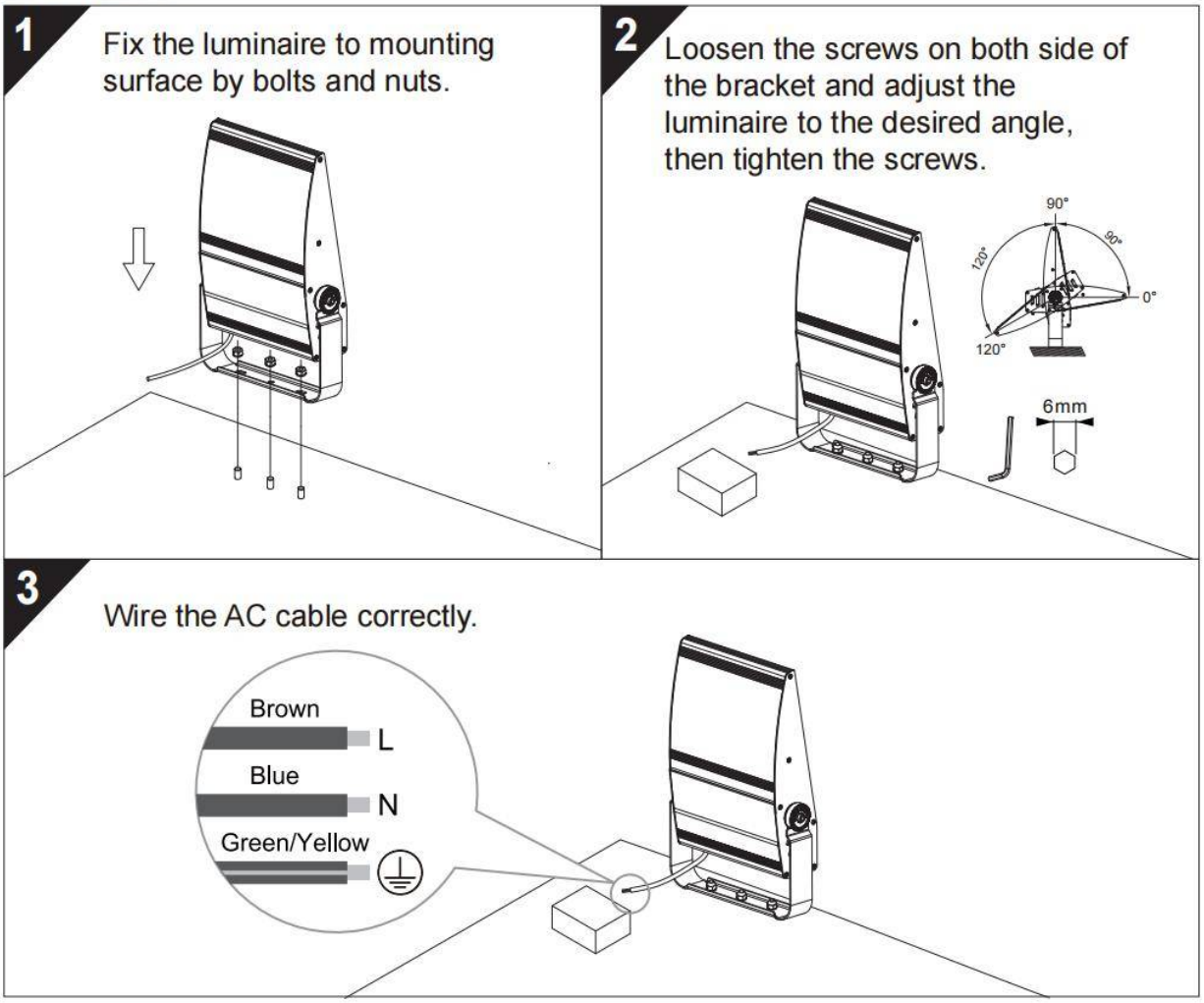
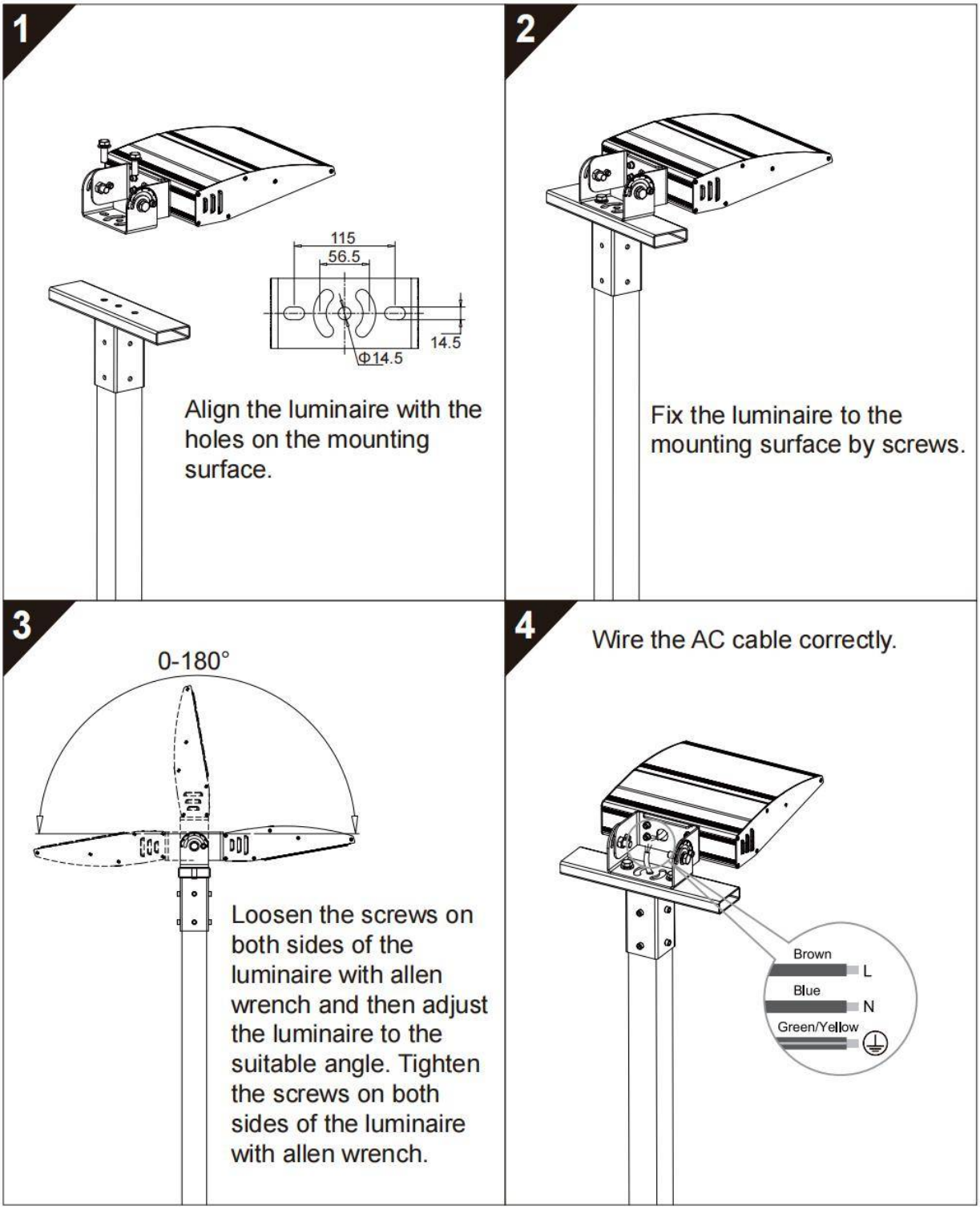
Trunnion Mount